6/2012

N6QW's 20M QRP SSB XCVR

The Bi-Lateral XCVR Uses Dual Gate MOSFETs

Rear Panel Remote PS2 Connector

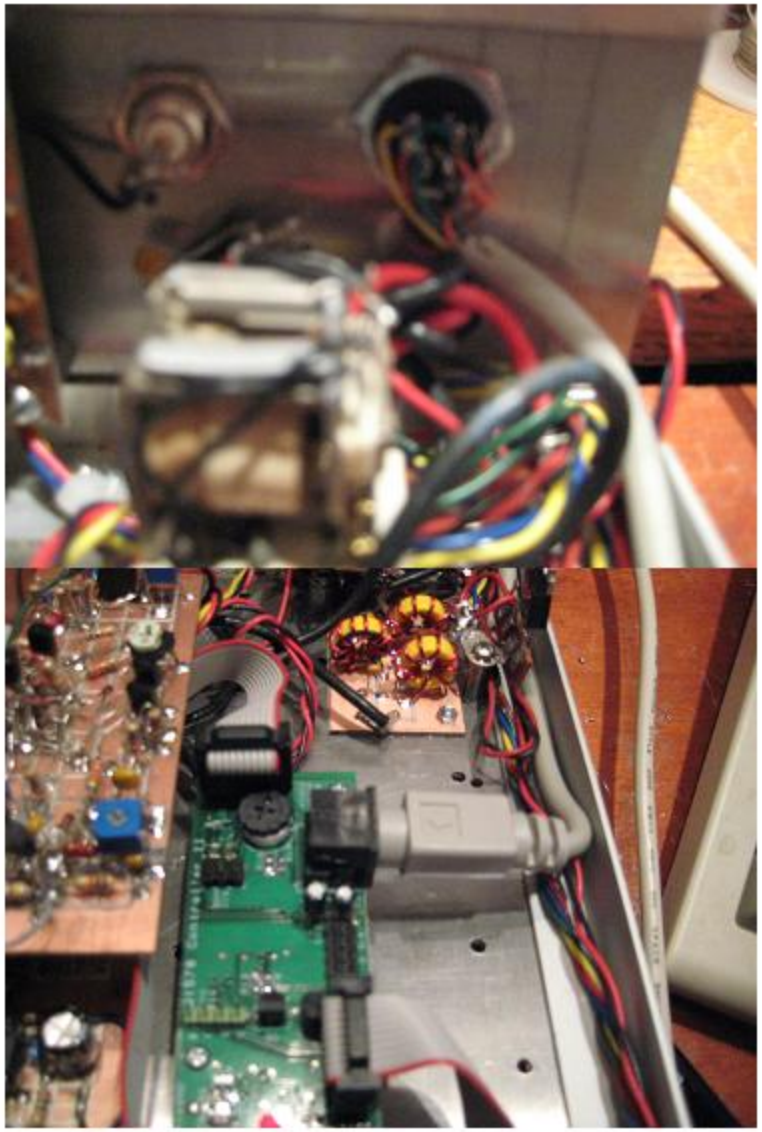

Controller II Internally Mounted

Build Notes Si570 Controller II - by Pete Juliano N6QW, radioguy90@hotmail.com

(As of June 10, 2012)

I bought just the board and programmed Micro Controller Unit from K5BCQ. Therefore I had to purchase all other parts. Here is a listing of parts and the Part Numbers. There are some items not listed as I relied on my very large junk box. For all of the 0805 SM Caps and Resistors I bought 10 pieces each. Thanks to Tom Hall, AK2B who also is building one of the boards and later confirmed by Kees, K5BCQ the size 1206 parts will fit on the pads.

Part Value	Mouser Part Number
0.01 Ufd Cap 16V	(0805 SM) 581-0805YC103KAT2a
0.1 Ufd Cap 16V	(0805 SM) 810-CGJ4J2X7R1C104K
10 Ufd Cap 16V	(0805 SM) 81_GRM21BF51C106ZE15
0 Ohm Resistor	(0805 SM) 71-CRCW0805-0-E3
50 Ohm Resistor	(0805 SM) 71-CRCW0805-50
2.7K Ohm Resistor	(0805 SM) 71-CRCW08052K70JNEA
3.3K Ohm Resistor	(0805 SM) 71-CRCW08053K30FKEB
4.7K Ohm Resistor	(0805 SM) 71-CRCW0805-4.7K-E3
8.2K Ohm Resistor	(0805 SM) 71CRCW08058K20FKEB
10K Pot	(3/8 Inch Thumbwheel) 858-91AR10KLF
Voltage Regulator (Microchip)	579-MCP1703-3302E/DB
EEPROM (Microchip)	579-24AA128-I/SN
2N7000 FET	512-2N7000
10P Single Row Header	571-1-826936-0
20P 2 Row Straight Header	517-836-01-10
Mini DIN PCB 6 Pin	161-2206
LCD Display	Purchased previously from K5BCQ
Rotary Encoder	Purchased previously from K5BCQ
10P 2 row Connector	Jameco Electronics P/N 138376
10 Conductor Ribbon Cable	Jameco Electronics P/N 643794
2 Mini Red LEDs	Purchased from Radio Shack P/N 276-0026
1N4148 Diodes	Jameco Electronics P/N 36038
Panel Mount Mini 6 pin DIN	Jameco P/N 2076762
PS2 Cable	Jameco P/N 177261
Si570 Frequency Generator	Purchased from Tom Hoflich KM5H

The circuit diagram I used to build the Controller II is on page 3-3 of the SDR2GO information package Rev 2.8, dated 4/5/2010. There are parts identified on that drawing that are not used on the Controller II board such as several of the Capacitors including C-25-29, C15-16, C17 and Inductor L1. The Analog switch P/N SN74LVC1G3157 is also not used.

In my configuration I used the CMOS version of the Si570 and therefore did not need to install U4, T1, C7 and R7.

The only glitches I ran into were the following:

- C19 is identified on the PCB but not in the schematic. I used a 10 Ufd.
- C12 and C13 are shown as polarized Caps and I used two very small electrolytic capacitors rated at 10 Ufd @ 25 Volts. These were in my junkbox.
- J17 is not on the PCB
- I could not get the LCD Display to work and what was not so obvious to me was that there are six very small pads (2 rows of three) located near J10. Pins 1 & 2 on J9 are brought to the center pads and you must short the two center pads to either the upper two pads or the lower two pads depending on what type of LCD you are using. If the LCD has Pin 1 as Ground and Pin 2 as Vcc then the center pads are connected to the upper two pads. If the LCD used has Pin 1 as Vdd and Pin 2 as Vss then the center pads are connected to the lower two pads. After discovering this, my display still did not work. The problem was I installed D2 backwards.
- I used 50 Ohms for R4.
- The solder pads for U3 are literally net with the device. You must use great care to align U3 on the pads.
- For U7 it is always a problem soldering the end connectors. Take your time even though the pads are ample, aligning the 8 pins to assure proper contact is a bear. U5 and the Voltage regulator installations are fairly straightforward.
- The programming of the device is a bit different from the original controller. There are so many more options. I am still working my way through the information. Memory location 41 is the first available slot to use the frequency generator. I am still working on trying to get the bottom line text changed. Even though I did change the text it did not show up for #41. Finally in desperation I went through all of the T locations and changed every one of then and got it to change. But it is not intuitive how to do that so that what T location you use is linked to the M location. I am also trying to set the cursor so it starts up at the location I want. That too is not intuitive. While P002 is the place to identify where the cursor should be on start up, the actual data to be entered initially was not clear to me. Then a little thought (and about umpteen tries) produced the correct result. I have the propensity to push buttons and hope it works which in about 99 times out of 100 doesn’t work. But here is the real answer. The display is what is known as a 16X2, which means there are 32 locations where information can be displayed and those are identified as positions 0 through 31. In the USA we use Right Justified for our writing, thus the first block in the upper left

-hand corner is position “0”. If you want the start up cursor to be on the hundreds digit that is position “9” (Ten positions over from the upper left hand corner.)

- The total elapsed time to build the unit would have been about 6 hours. Had I not installed D2 improperly that would have been the total time. But alas it took me about 10 hours from start to finish. Take your time and check the part to be installed about 5 times including making sure you are installing the part in the right location. K5BCQ’s words “Trust But Verify” really are important! You must also observe the polarities on diodes and be certain to install the IC’s so that Pin 1 is really pin 1 on both the PCB and the part. Look for solder bridges and shorts. Be also vigilant the some of the devices are CMOS and subject to ESD. Ground yourself before doing any work on the board and use extreme care in handling of the solid state devices.

Build Tips:

You will be soldering surface mount devices and great care regarding part alignment with the pads is critical especially for U3. To give you an edge up on that here are some tips that should help make the build successful.

- Work area – I bought a cheap cookie pan that is about 12 inches wide and 18 inches long and has a lip of about ½ inch. This is my work area and it has been a life saver when one of the surface mount parts takes on a life of its own and moves off of the PCB. Since the pan has a dark dull gray color I line the bottom with a piece of white typing paper and it easy to spot the parts against the white background.
- A grounded fine point temperature controlled soldering iron is a must! I bought mine from Marlin P Jones Co (in Florida). Your Radio Shack 80 Watt iron with a 1-inch wide tip will not work!
- The PC Board must be anchored while performing those very small solder joints. Before you do anything take the bare board and using a piece of 4” X 6” double sided Copper Board lay the small PCB on top of the copper board approximately in the center and mark the three mounting holes with a pencil mark. The three holes are arranged so that there are two holes in the board corners and the third hole is on the opposite side but offset. Flip the board over so that the two corner holes align with the original pencil marks and then mark the third hole with a pencil mark. When you are done there are a total of four pencil marks. Accurately drill the four holes large enough to pass a 2-56 screw through the hole. I have a stock of aluminum spacers that include ½ inch 2-56 holes. Using three spacers and six screws the PCB can be mounted above the Copper Board. I simply tape the Copper Board using 3M Masking tape to the bottom of the cookie pan and you have a rock solid platform to mount the parts. The cookie pan can be rotated to gain optimum access. When you have finished one side simply flip the PCB over and relocate the third spacer and once again rock solid. The spacers enable one to solder on the topside while providing clearance for parts already installed on the bottom side.
- Part installation sequencing is important! I started with the caps and resistors first and then looked for locations where if a part was installed could other parts be

successfully installed. C12/13 and D2/D3 are a good example. Install C12/13 first! The IC's were next installed. The headers and keyboard connector should be the last item installed.

- I used the 0805 sized parts but now have been made aware that the 1206 size would fit on the pads and that would have made life a lot easier. U3 is the hardest part to solder because of the alignment issues – bigger pads would have helped. But a way to make it happen is to tack solder pin 1 and then move U3 around so that there is perfect alignment and then solder the rest and go back and touch up Pin 1.
- You need only supply a source of 5 VDC to the PCB as the on-board regulator takes care of supplying the 3.3 Volts etc to the installed components. Power is applied at J5 with the + 5VDC DC being supplied to Pins 9 & 10 and the Ground return is applied to pins 4, 5 and 6. An outboard MC7805 regulator Board was built to provide the 5 VDC from a +12 VDC source. That same regulator supplies the voltage for the backlight.

Operational Notes:

My application is to use the Controller II to replace a Controller I that is installed in a 20M QRP SSB transceiver. I have set the offset to +9.0015 MHz and thus the actual Controller II has its output at 23.0 MHz and the display reads 14.0 MHz. To receive USB one has to use the normal LSB xtal (9.0015 MHz) in the BFO/CIO since there is a sideband inversion when using the subtractive mix with the LO above the received frequency. This works fine as the LO is above the 10 MHz lower cutoff frequency. I did not readily see how to make the offset a minus. I was so happy to get the +9.0015 that it did not matter. But if one wanted to receive LSB on 20M then it would be wise to use another memory location and set the offset to 8.9985 MHz and use the normal USB crystal (8.9985 MHz) for the BFO/CIO. This will assure an accurate transmitted frequency display.

Since I used 50 Ohms for R4, I measured the output @ 23 MHz at Clock + and it was about 2.0 Volts peak to peak. That was without any low pass filter as described for the Controller I. I will build that low pass filter and take another measurement. But there appears to be plenty of signal strength useable with many of the packaged DBM devices. (At 2.0 Volts PTP that is +10 dBM –a lot of signal strength. – it may require a 3 dB pad for a + 7 dBM device.)

The keyboard function is really cool since you can enter frequencies and various other functions. Tuning with the up and down keys is way too cool! Several additional considerations are underway. Where the keyboard connector is located especially if you want to install the Controller II board internal to the radio this will require installing it in a location where you can plug in the keyboard, such as along the side of the case or near the rear panel. An area of future investigation is to find some sort of short jumper cable that would plug into the board and then have a panel mounted 6 pin Mini DIN connector that could be mounted on the back panel or at some out of the way location. Another option would be to use the same sort of jumper cable to a USB panel type connector and that would then interface to a USB keyboard. I did install a panel mounted 6 Pin Mini

DIN connector on the rear panel and also purchased a cable that has a PS2 connector at each end. I cut off one of the ends at about 7 inches and mated that with the Controller II board and the panel mounted Din. It works perfectly so now the keyboard plugs into the back panel. The parts are available from Jameco Electronics and are less than $5 total and the part numbers are shown in the list at the beginning of the Build Notes. I have also ordered some mini keyboards including one that is normally installed in a Dell Netbook and assuming I can adapt it shows great promise for making this a very compact addition to my homebrew radio.

Operation with the Controller has been extremely satisfying and I find I am doing more tuning with the keyboard rather than the knob. Great job Kees and John. This is one heck of an addition to many existing radios!

Pete, N6QW

30 MHz Low Pass Filter from EI9GQ's (Ed's) Website

This was used following the Si570 Clock + Output

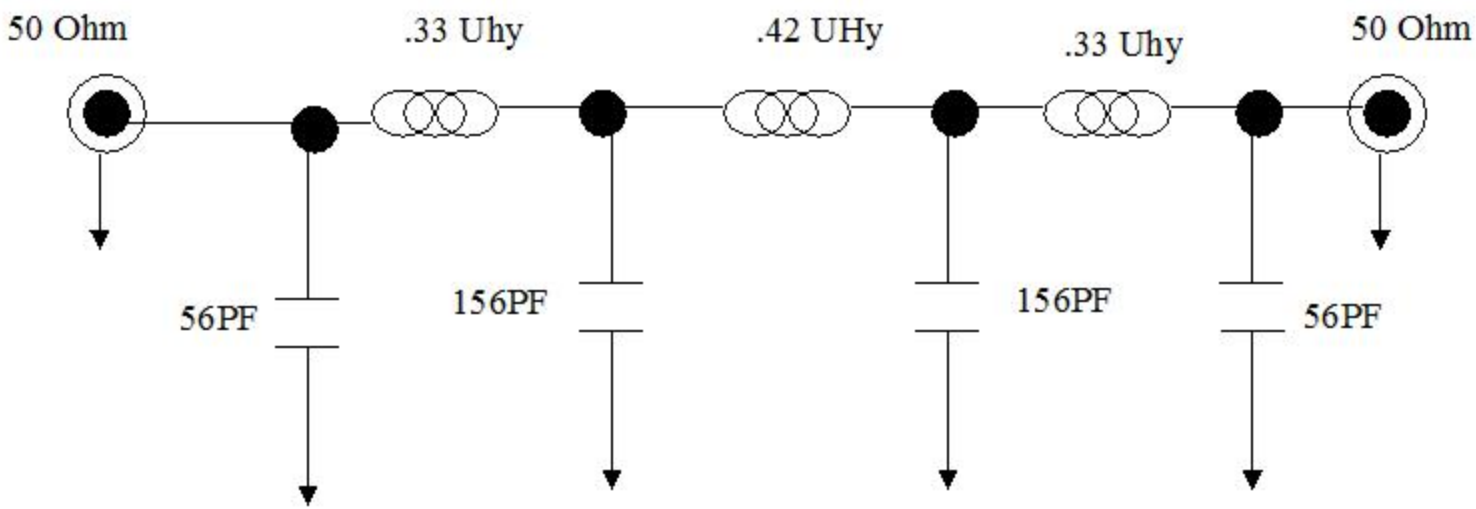

.33 UHY = 9 Turns # 20 on a T-50-6 (yellow core)
.42 UHY = 10 Turns #20 on a T-50-6 (yellow core)

N6QW 6/2012


14.157.000 KHz
HM41 RX LSB HP

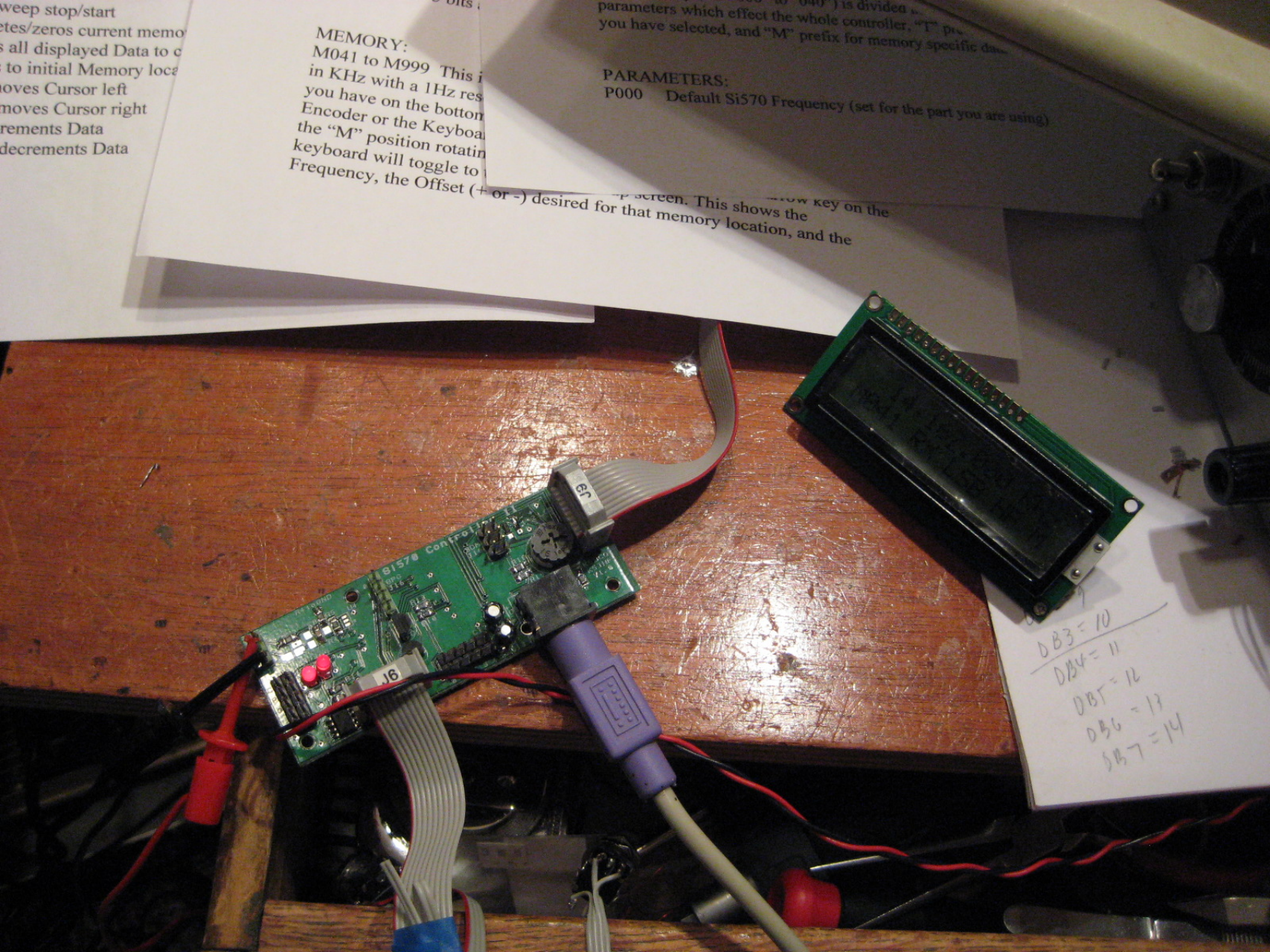
weep stop/start
etes/zeros current memo
s all displayed Data to c
to initial Memory loca
oves Cursor left
moves Cursor right
rements Data
decrements Data
MEMORY:
M041 to M999 This i
in KHz with a 1Hz res
you have on the bottom
Encoder or the Keyboa
the "M" position rotatin
keyboard will toggle to
Frequency, the Offset (+ or -) desired for that memory location, and the
PARAMETERS:
P000 Default Si570 Frequency (set for the part you are using)
you have selected, and "M" prefix for memory specific da
J3
J6
DB3 = 10
DB4 = 11
DB5 = 12
DB6 = 13
DB7 = 14

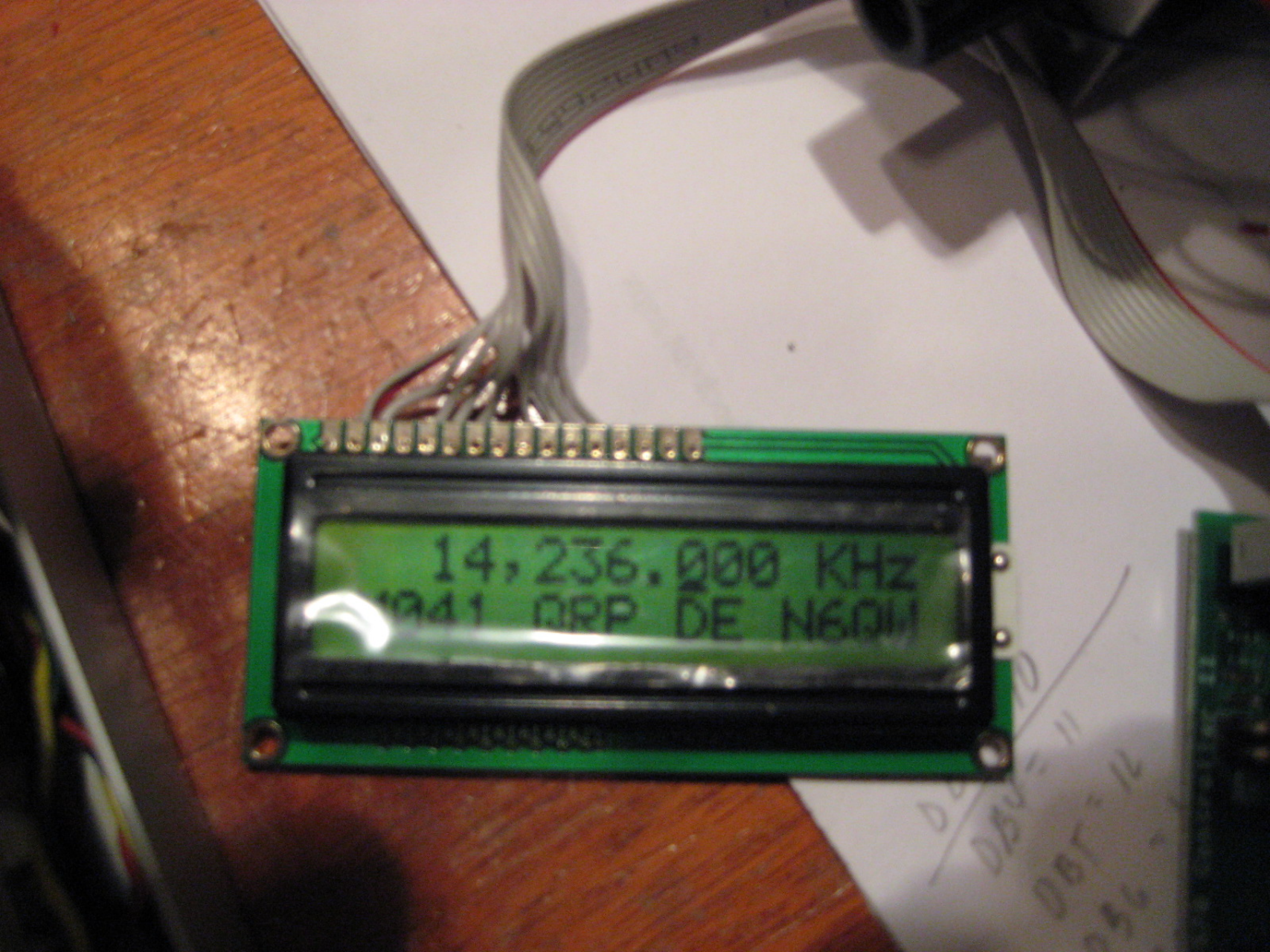
14,236.000 KHz
1041 QRP DE N6QW

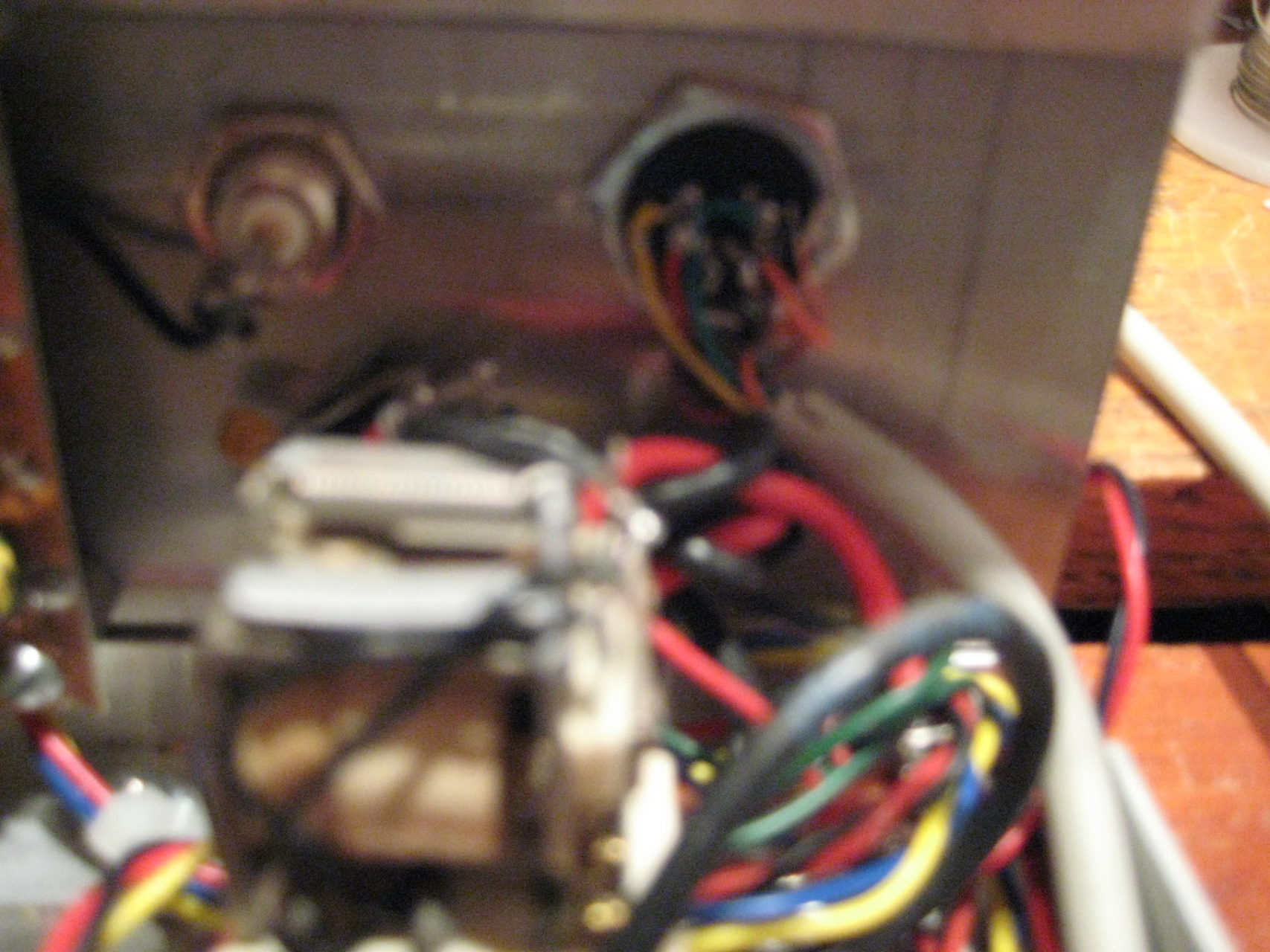


14.172.400 KHz
M041 QRP DE N6OW
TUNE